

P2BC 100-CPSS-DFHPillow block bearing unit with composite or cast metal housing

Pillow block bearing unit with composite or cast metal housing

Pillow (plummer) block bearing units consisting of an insert bearing mounted in a composite or cast metal housing that can be bolted to a support surface. In addition to being part of a unit, some pillow block housings for insert bearings are available as separate components. The SKF assortment includes units that are compliant with several industrial standards and meet many requirements.

- Ready to mount
- Lubricated and sealed bearings
- Quick locking on the shaft
- Large variety of housing shapes, housing materials, and locking methods
- Concentric locking options for high speeds and low vibration

Overview

Dimensions

Shaft diameter	25.4 mm
Centre height (pillow block)	36.5 mm
Housing overall width	36 mm
Centre distance between bolt holes	105 mm
Bearing width, total	27.3 mm

Performance

Basic dynamic load rating	11.9 kN
Basic static load rating	7.8 kN
Limiting speed	700 r/min

Properties

Housing type	Pillow block
Number of bolt holes for fasteners	2
Fastening bolt hole type	Plain
Retaining feature, inner ring	Set screws
Bore type	Cylindrical
Rubber	Without

seating ring	
Material, housing	Composite for the SKF Food Line
Material, bearing	Stainless steel
Coating	Without
Sealing, bearing	Seal on both sides and flinger on one side
Sealing type	Contact, gutter
Sealing, unit	End cover and back seal
Lubricant	Grease
Relubrication hole	Without
Grease fitting	Without

Technical Specification

Compliance with standard	Not standardized
Purpose specific	For food and beverage applications
Material, housing	Composite for the SKF Food Line
Sealing, bearing	Seal on both sides and flinger on one side
Sealing type, bearing	Contact, gutter
Sealing, unit	End cover and back seal
Coating	Without

NOT FOUND

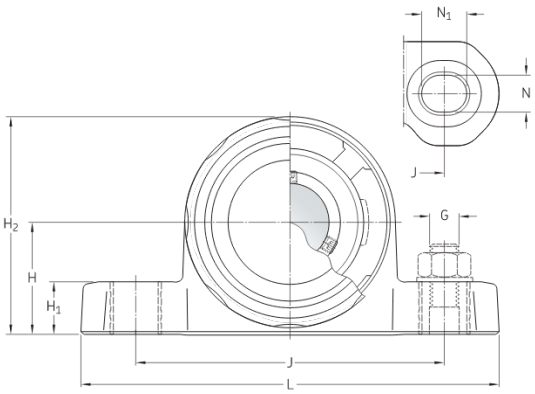

Dimensions

d	25.4 mm	Bore diameter
A	36 mm	Base width
A_1	36 mm	Top width
A_5	62.6 mm	Width including end cover
B	27.3 mm	Width of inner ring
B_4	5 mm	Distance from locking device side face to thread centre
H	36.5 mm	Height of spherical seat centre
H_1	17 mm	Foot height
H_2	72.5 mm	Overall height
J	105 mm	Distance between attachment bolts
J	max. 108 mm	Distance between attachment bolts
J	min. 102 mm	Distance between attachment bolts
L	142 mm	Overall length
N	11.5 mm	Diameter of attachment bolt hole
N_1	14.3 mm	Length of attachment bolt hole

s_1	19.8	mm	Distance from locking device side face to raceway centre

Calculation data

Basic dynamic load rating	C	11.9 kN
Basic static load rating	C_0	7.8 kN
Fatigue load limit	P_u	0.335 kN
Limiting speed		700 r/min

Mass

Mass bearing unit	0.36 kg

Mounting information

Set screw	G_2	1/4-28 UNF
Hexagonal key size for set screw		3.175 mm
Recommended tightening torque for set screw		4 N·m
Recommended diameter for attachment bolts, mm	G	10 mm
Recommended diameter for attachment bolts, inch	G	0.375 in

Terms and conditions

By accessing and using this website / app owned and published by AB SKF (publ.) (556007-3495 · Gothenburg) (“SKF”), you agree to the following terms and conditions:

Warranty Disclaimer and Limitation of Liability

Although every care has been taken to assure the accuracy of the information on this website / app, SKF provides this information "AS IS" and DISCLAIMS ALL WARRANTIES, EXPRESS OR IMPLIED, INCLUDING, BUT NOT LIMITED TO, IMPLIED WARRANTIES OF MERCHANTABILITY AND FITNESS FOR A PARTICULAR PURPOSE. You acknowledge that your use of this website / app is at your sole risk, that you assume full responsibility for all costs associated with use of this website / app, and that SKF shall not be liable for any direct, incidental, consequential, or indirect damages of any kind arising out of your access to, or use of the information or software made available on this website / app. Any warranties and representations in this website / app for SKF products or services that you purchase or use will be subject to the agreed upon terms and conditions in the contract for such product or service. Further, for non-SKF websites / apps that are referenced in our website / app or where a hyperlink appears, SKF makes no warranties concerning the accuracy or reliability of the information in these websites / apps and assumes no responsibility for material created or published by third parties contained therein. In addition, SKF does not warrant that this website / app or these other linked websites / apps are free from viruses or other harmful elements.

Third Party Services

When viewing YouTube content via the SKF website(s) (i.e. using YouTube API Services), you agree to be bound by the YouTube Terms of Service.

Copyright

Copyright in this website / app copyright of the information and software made available on this website / app rest with SKF or its licensors. All rights are reserved. All licensed material will reference the licensor that has granted SKF the right to use the material. The information and software made available on this website / app may not be reproduced, duplicated, copied, transferred, distributed, stored, modified, downloaded or otherwise exploited for any commercial use without the prior written approval of SKF. However, it may be reproduced, stored and downloaded for use by individuals without prior written approval of SKF. Under no circumstances may this information or software be supplied to third parties.
This website /app includes certain images used under license from Shutterstock, Inc.

Trademarks and Patents

All trademarks, brand names, and corporate logos displayed on the website / app are the property of SKF or its licensors, and may not be used in any way without prior written approval by SKF. All licensed trademarks published on this website / app reference the licensor that has granted SKF the right to use the trademark. Access to this website / app does not grant to the user any license under any patents owned by or licensed to SKF.

Changes

SKF reserves the right to make changes or additions to this website / app at any time.