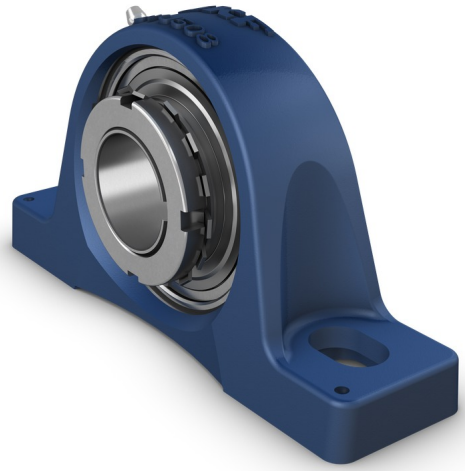

SYJ 60 KFPillow block ball bearing unit with adapter sleeve locking, cast iron, Japanese standards

Pillow block ball bearing unit with adapter sleeve locking, cast iron, Japanese standards

Pillow (plummer) block ball bearing units consist of an insert bearing mounted in a cast iron housing that can be bolted to a support surface. This variant is suitable for applications with both constant and alternating directions of rotation. It is locked with an adapter sleeve, enabling quick and easy mounting onto the shaft. Adapter sleeve needs to be ordered separately.

- Strong
- Ready to mount
- Designed for a constant and alternating rotation
- Lubricated and sealed bearing
- Quick locking onto the shaft
- Cost-effective

Overview

Dimensions

Shaft diameter	55 mm
Centre height (pillow block)	69.8 mm
Housing overall width	65 mm
Centre distance between bolt holes	188.5 mm
Bearing width, total	42.4 mm

Performance

Basic dynamic load rating	52.7 kN
Basic static load rating	36 kN
Limiting speed	3 400 r/min

Properties

Housing type	Pillow block
Number of bolt holes for fasteners	2
Fastening bolt hole type	Plain
Retaining feature, inner ring	Adapter sleeve
Bore type	Tapered
Rubber seating ring	Without
Material, housing	Cast iron

Material, bearing	Bearing steel
Coating	Without
Sealing, bearing	Seal and flinger on both sides
Sealing type	Contact, standard
Sealing, unit	Without
Lubricant	Grease
Relubrication hole	With
Grease fitting	With

Technical Specification

Order adapter sleeve separately	
Compliance with standard	JIS
Material, housing	Cast iron
Sealing, bearing	Seal and flinger on both sides
Sealing type, bearing	Contact, standard
Sealing, unit	Without
Coating	Without

NOT FOUND

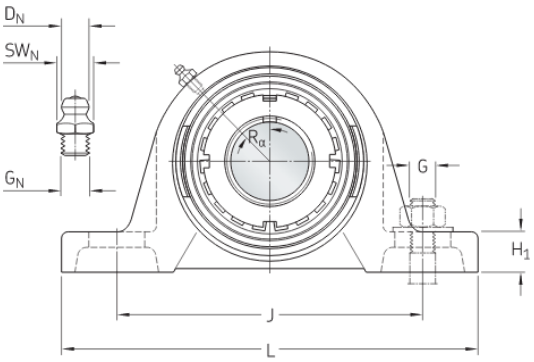

Dimensions

d	55 mm	Bore diameter
d_1	≈ 75.64 mm	Shoulder diameter of inner ring
d_3	80 mm	Outside diameter of lock nut
A	65 mm	Base width
A_1	47 mm	Top width
B_1	42.4 mm	Overall bearing width
B_1	62 mm	Width of sleeve
H	69.8 mm	Height of spherical seat centre
H_1	26.5 mm	Foot height
H_2	137.5 mm	Overall height
J	188.5 mm	Distance between attachment bolts
J	max. 198 mm	Distance between attachment bolts
J	min. 179 mm	Distance between attachment bolts
L	241 mm	Overall length
N	20 mm	Diameter of attachment bolt hole

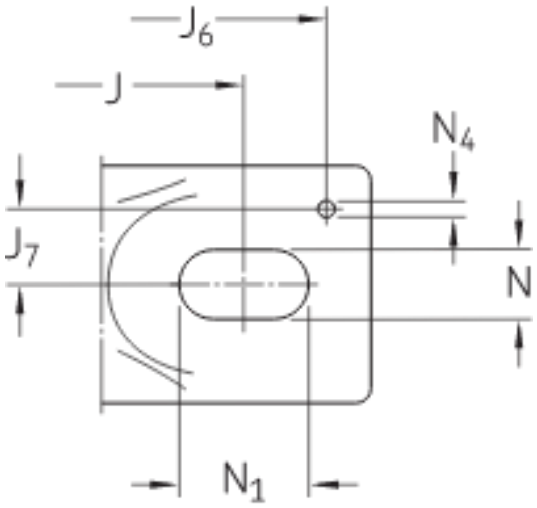

N_1	29.5 mm	Length of attachment bolt hole
s_1	33.7 mm	Distance from locking device side face to raceway centre

Value specified for s_1

Threaded hole

R_G	1/4-28 UNF	Housing thread for the grease fitting
R_1	5.5 mm	Axial position of the housing thread
R_α	45 °	Angular position of the housing thread

Grease fitting

D_N	6.5 mm	Diameter of head sphere of grease fitting
SW	7 mm	Hexagonal key size for the grease fitting
G_N	1/4-28 SAE-LT	Thread of grease fitting

Dowel pins

J_6	223 mm	Distance of dowel pins
J_7	23.5 mm	Axial offset of dowel pins
N_4	4 mm	Recommended diameter for dowel pins

Calculation data

Basic dynamic load rating	C	52.7 kN
Basic static load rating	C_0	36 kN
Fatigue load limit	P_u	1.53 kN
Limiting speed		3 400 r/min

Mass

Mass bearing unit		4.1 kg

Mounting information

Associated spanner		HN 12
Recommended lock nut tightening angle	α	95 °
Recommended diameter for attachment bolts, mm	G	16 mm
Recommended diameter for attachment bolts, inch	G	0.625 in

Terms and conditions

By accessing and using this website / app owned and published by AB SKF (publ.) (556007-3495 · Gothenburg) (“SKF”), you agree to the following terms and conditions:

Warranty Disclaimer and Limitation of Liability

Although every care has been taken to assure the accuracy of the information on this website / app, SKF provides this information "AS IS" and DISCLAIMS ALL WARRANTIES, EXPRESS OR IMPLIED, INCLUDING, BUT NOT LIMITED TO, IMPLIED WARRANTIES OF MERCHANTABILITY AND FITNESS FOR A PARTICULAR PURPOSE. You acknowledge that your use of this website / app is at your sole risk, that you assume full responsibility for all costs associated with use of this website / app, and that SKF shall not be liable for any direct, incidental, consequential, or indirect damages of any kind arising out of your access to, or use of the information or software made available on this website / app. Any warranties and representations in this website / app for SKF products or services that you purchase or use will be subject to the agreed upon terms and conditions in the contract for such product or service. Further, for non-SKF websites / apps that are referenced in our website / app or where a hyperlink appears, SKF makes no warranties concerning the accuracy or reliability of the information in these websites / apps and assumes no responsibility for material created or published by third parties contained therein. In addition, SKF does not warrant that this website / app or these other linked websites / apps are free from viruses or other harmful elements.

Third Party Services

When viewing YouTube content via the SKF website(s) (i.e. using YouTube API Services), you agree to be bound by the YouTube Terms of Service.

Copyright

Copyright in this website / app copyright of the information and software made available on this website / app rest with SKF or its licensors. All rights are reserved. All licensed material will reference the licensor that has granted SKF the right to use the material. The information and software made available on this website / app may not be reproduced, duplicated, copied, transferred, distributed, stored, modified, downloaded or otherwise exploited for any commercial use without the prior written approval of SKF. However, it may be reproduced, stored and downloaded for use by individuals without prior written approval of SKF. Under no circumstances may this information or software be supplied to third parties.
This website /app includes certain images used under license from Shutterstock, Inc.

Trademarks and Patents

All trademarks, brand names, and corporate logos displayed on the website / app are the property of SKF or its licensors, and may not be used in any way without prior written approval by SKF. All licensed trademarks published on this website / app reference the licensor that has granted SKF the right to use the trademark. Access to this website / app does not grant to the user any license under any patents owned by or licensed to SKF.

Changes

SKF reserves the right to make changes or additions to this website / app at any time.