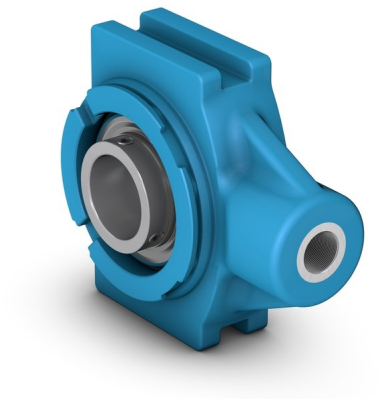

WSTUC 30M-TPZMTake-up composite unit with insert ball bearing, set screw locking and extended inner ring, not standardized, SKF Food Line

Take-up composite unit with insert ball bearing, set screw locking and extended inner ring, not standardized, SKF Food Line

Take-up ball bearing units for the SKF Food Line consisting of an insert bearing based on a sealed deep groove ball bearing mounted in a composite housing. They are strong, yet lightweight, and chemically resistant to detergents and contaminants. Typically mounted in take-up frames, the unit has an inner ring extended on both sides and is locked by tightening a set screw on the inner ring, that makes it easy to mount.

- Strong, yet lightweight
- Chemically resistant
- Designed for an alternating rotation
- Well suited to follow the highest food safety standards
- Reliable in wet environments

Overview

Dimensions

Shaft diameter	30 mm
Housing overall width	39 mm
Bearing width, total	38.1 mm

Performance

Basic dynamic load rating	19.5 kN
Basic static load rating	11.2 kN
Limiting speed	3 800 r/min
Note	Limiting speed with shaft tolerance h6

Properties

Housing type	Take-up
Retaining feature, inner ring	Set screws
Bore type	Cylindrical
Rubber seating ring	Without
Material, housing	Composite for the SKF Food Line
Material, bearing	Bearing steel
Coating	Zinc-coated bearing

Sealing, bearing	Seal and flinger on both sides
Sealing type	Contact, gutter
Sealing, unit	Optional end cover
Lubricant	Grease
Relubrication hole	Without
Grease fitting	Without

Technical Specification

Compliance with standard	Not standardized
Purpose specific	For food and beverage applications
Material, housing	Composite for the SKF Food Line
Sealing, bearing	Seal and flinger on both sides
Sealing type, bearing	Contact, gutter
Sealing, unit	Optional end cover
Coating	Zinc-coated bearing

NOT FOUND

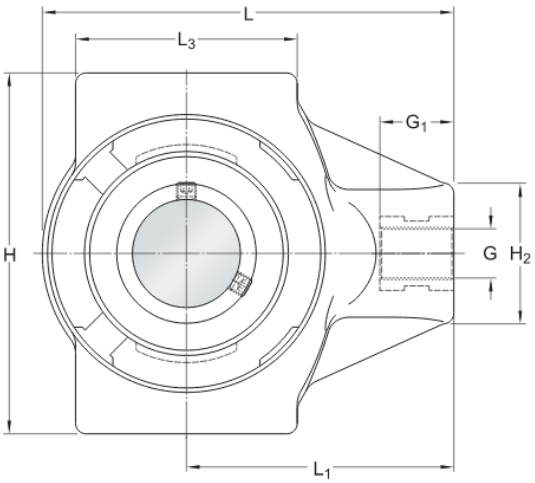

Dimensions

d	30 mm	Bore diameter
d_1	≈ 39.7 mm	Shoulder diameter of inner ring
D_c	72 mm	Centring diameter
H_a	6 mm	Groove height for backseal
A	39 mm	Overall width
A_1	12 mm	Width of piloting groove
A_2	30 mm	Width of flange in which piloting grooves are provided
A_5	67.1 mm	Standout of end cover
B	38.1 mm	Width of inner ring
B_4	5 mm	Distance from locking device side face to thread centre
H	103 mm	Overall height
H_1	88.8 mm	Distance between bottoms of piloting grooves

H_2	40 mm	Height of attachment end
L	117 mm	Overall length
L_1	76 mm	Distance from attachment end face to centre line of spherical seat diameter
L_3	63 mm	Length of piloting groove
G	M16	Thread size attachment end
G_1	24 mm	Thread length
s_1	22.2 mm	Distance from locking device side face to raceway centre

Calculation data

Basic dynamic load rating	C	19.5 kN
Basic static load rating	C_0	11.2 kN
Fatigue load limit	P_u	0.475 kN
Limiting speed		3 800 r/min
		Limiting speed with shaft tolerance h6

Mass

Mass bearing unit	0.57 kg

Mounting information

Set screw	G_2	M6x0.75
Hexagonal key size for set screw		3 mm
Recommended tightening torque for set screw		4 N·m

Terms and conditions

By accessing and using this website / app owned and published by AB SKF (publ.) (556007-3495 · Gothenburg) (“SKF”), you agree to the following terms and conditions:

Warranty Disclaimer and Limitation of Liability

Although every care has been taken to assure the accuracy of the information on this website / app, SKF provides this information "AS IS" and DISCLAIMS ALL WARRANTIES, EXPRESS OR IMPLIED, INCLUDING, BUT NOT LIMITED TO, IMPLIED WARRANTIES OF MERCHANTABILITY AND FITNESS FOR A PARTICULAR PURPOSE. You acknowledge that your use of this website / app is at your sole risk, that you assume full responsibility for all costs associated with use of this website / app, and that SKF shall not be liable for any direct, incidental, consequential, or indirect damages of any kind arising out of your access to, or use of the information or software made available on this website / app. Any warranties and representations in this website / app for SKF products or services that you purchase or use will be subject to the agreed upon terms and conditions in the contract for such product or service. Further, for non-SKF websites / apps that are referenced in our website / app or where a hyperlink appears, SKF makes no warranties concerning the accuracy or reliability of the information in these websites / apps and assumes no responsibility for material created or published by third parties contained therein. In addition, SKF does not warrant that this website / app or these other linked websites / apps are free from viruses or other harmful elements.

Third Party Services

When viewing YouTube content via the SKF website(s) (i.e. using YouTube API Services), you agree to be bound by the YouTube Terms of Service.

Copyright

Copyright in this website / app copyright of the information and software made available on this website / app rest with SKF or its licensors. All rights are reserved. All licensed material will reference the licensor that has granted SKF the right to use the material. The information and software made available on this website / app may not be reproduced, duplicated, copied, transferred, distributed, stored, modified, downloaded or otherwise exploited for any commercial use without the prior written approval of SKF. However, it may be reproduced, stored and downloaded for use by individuals without prior written approval of SKF. Under no circumstances may this information or software be supplied to third parties.
This website /app includes certain images used under license from Shutterstock, Inc.

Trademarks and Patents

All trademarks, brand names, and corporate logos displayed on the website / app are the property of SKF or its licensors, and may not be used in any way without prior written approval by SKF. All licensed trademarks published on this website / app reference the licensor that has granted SKF the right to use the trademark. Access to this website / app does not grant to the user any license under any patents owned by or licensed to SKF.

Changes

SKF reserves the right to make changes or additions to this website / app at any time.