SYWK 25 YTHPillow block ball bearing unit with extended inner ring and set screw locking, composite



Pillow block ball bearing unit with extended inner ring and set screw locking, composite

Pillow (plummer) block ball bearing units consist of an insert bearing mounted in a composite housing that is lightweight but robust and has excellent corrosion resistance. This variant is suitable for applications with both constant and alternating directions of rotation. It has an inner ring extended on both sides and is locked onto the shaft by tightening a set screw on the inner ring, making it easy to mount.

- Designed for a constant and alternating rotation
- Excellent corrosion resistance
- Lightweight
- Recyclable

Overview

Dimensions

Shaft diameter	25 mm
Centre height (pillow block)	36.5 mm
Housing overall width	32 mm
Centre distance between bolt holes	105.5 mm
Bearing width, total	34.1 mm

Performance

Basic dynamic load rating	11.9 kN
Basic static load rating	7.8 kN
Limiting speed	4 300 r/min
Note	Limiting speed with shaft tolerance h6

Properties

Housing type	Pillow block
Number of bolt holes for fasteners	2
Fastening bolt hole type	Plain
Retaining feature, inner ring	Set screws
Bore type	Cylindrical
Rubber seating ring	Without
Material, housing	Composite for the SKF Food

	Line
Material, bearing	Stainless steel
Coating	Without
Sealing, bearing	Seal and flinger on both sides
Sealing type	Contact, multiple
Sealing, unit	Optional end cover
Lubricant	Grease
Relubrication hole	Without
Grease fitting	Without

Technical Specification

Compliance with standard	ISO with boundary dimension deviations
Purpose specific	For food and beverage applications
Material, housing	Composite for the SKF Food Line
Sealing, bearing	Seal and flinger on both sides
Sealing type, bearing	Contact, multiple
Sealing, unit	Optional end cover
Coating	Without

NOT FOUND

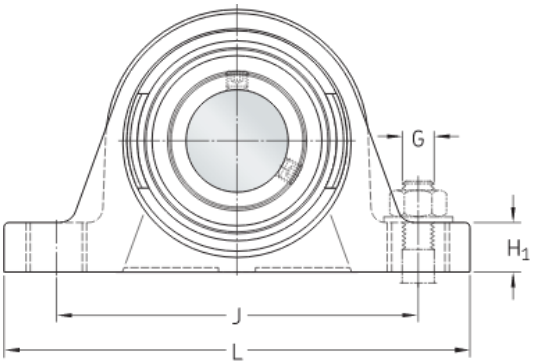

Dimensions

d	25 mm	Bore diameter
d_1	≈ 33.74 mm	Shoulder diameter of inner ring
A	32 mm	Base width
A_1	22 mm	Top width
A_5	26 mm	Width including end cover
B	34.1 mm	Width of inner ring
B_1	34.1 mm	Overall bearing width
B_4	5 mm	Distance from locking device side face to thread centre
H	36.5 mm	Height of spherical seat centre
H_1	16 mm	Foot height
H_2	70.5 mm	Overall height
J	105.5 mm	Distance between attachment bolts
J	max. 111 mm	Distance between attachment bolts
J	min. 100 mm	Distance between attachment bolts

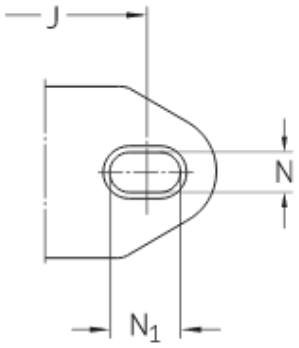

L	134 mm	Overall length
N	12 mm	Diameter of attachment bolt hole
N_1	17.5 mm	Length of attachment bolt hole
s_1	19.8 mm	Distance from locking device side face to raceway centre

Calculation data

Basic dynamic load rating	C	11.9 kN
Basic static load rating	C_0	7.8 kN
Fatigue load limit	P_u	0.335 kN
Limiting speed		4 300 r/min
		Limiting speed with shaft tolerance h6

Mass

Mass bearing unit	0.32 kg

Mounting information

Set screw	G_2	M6x0.75
Hexagonal key size for set screw		3 mm
Recommended tightening torque for set screw		4 N·m
Recommended diameter for attachment bolts, mm	G	10 mm
Recommended diameter for attachment bolts, inch	G	0.375 in

Terms and conditions

By accessing and using this website / app owned and published by AB SKF (publ.) (556007-3495 · Gothenburg) (“SKF”), you agree to the following terms and conditions:

Warranty Disclaimer and Limitation of Liability

Although every care has been taken to assure the accuracy of the information on this website / app, SKF provides this information "AS IS" and DISCLAIMS ALL WARRANTIES, EXPRESS OR IMPLIED, INCLUDING, BUT NOT LIMITED TO, IMPLIED WARRANTIES OF MERCHANTABILITY AND FITNESS FOR A PARTICULAR PURPOSE. You acknowledge that your use of this website / app is at your sole risk, that you assume full responsibility for all costs associated with use of this website / app, and that SKF shall not be liable for any direct, incidental, consequential, or indirect damages of any kind arising out of your access to, or use of the information or software made available on this website / app. Any warranties and representations in this website / app for SKF products or services that you purchase or use will be subject to the agreed upon terms and conditions in the contract for such product or service. Further, for non-SKF websites / apps that are referenced in our website / app or where a hyperlink appears, SKF makes no warranties concerning the accuracy or reliability of the information in these websites / apps and assumes no responsibility for material created or published by third parties contained therein. In addition, SKF does not warrant that this website / app or these other linked websites / apps are free from viruses or other harmful elements.

Third Party Services

When viewing YouTube content via the SKF website(s) (i.e. using YouTube API Services), you agree to be bound by the YouTube Terms of Service.

Copyright

Copyright in this website / app copyright of the information and software made available on this website / app rest with SKF or its licensors. All rights are reserved. All licensed material will reference the licensor that has granted SKF the right to use the material. The information and software made available on this website / app may not be reproduced, duplicated, copied, transferred, distributed, stored, modified, downloaded or otherwise exploited for any commercial use without the prior written approval of SKF. However, it may be reproduced, stored and downloaded for use by individuals without prior written approval of SKF. Under no circumstances may this information or software be supplied to third parties.
This website /app includes certain images used under license from Shutterstock, Inc.

Trademarks and Patents

All trademarks, brand names, and corporate logos displayed on the website / app are the property of SKF or its licensors, and may not be used in any way without prior written approval by SKF. All licensed trademarks published on this website / app reference the licensor that has granted SKF the right to use the trademark. Access to this website / app does not grant to the user any license under any patents owned by or licensed to SKF.

Changes

SKF reserves the right to make changes or additions to this website / app at any time.