

7013 ACD/P4ASuper-precision, high-capacity, single row angular contact ball bearing

Super-precision, high-capacity, single row angular contact ball bearing

These super-precision, high-capacity, single row angular contact ball bearings, with 25° contact angle, accommodate radial and axial loads acting simultaneously, where the axial load acts in one direction only. They are designed to accommodate heavy loads at relatively high speeds under low to moderate operating temperatures.

- Very high running accuracy
- Very high load carrying capacity
- Relatively high speed and stiffness

Overview

Dimensions

Bore diameter	65 mm
Outside diameter	100 mm
Width	18 mm
Contact angle	25 °

Performance

Basic dynamic load rating	39 kN
Basic static load rating	35.5 kN
Attainable speed for grease lubrication	12 000 r/min
Attainable speed for oil-air lubrication	19 000 r/min

Properties

Contact type	Normal contact (two-point contact)
Number of rows	1
Ring type	One-piece inner and outer rings
Design	High-capacity D
Universal matching bearing	No
Matched arrangement	No
Matched condition (axial clearance/ preload)	Not applicable
Tolerance class	P4A
Material, bearing	Bearing steel

Coating	Without
Sealing	Without
Lubricant	None

Technical Specification

Universal matching bearing(s)	No

NOT FOUND

Dimensions

d	65 mm	Bore diameter
D	100 mm	Outside diameter
B	18 mm	Width
d_1	75.8 mm	Shoulder diameter of inner ring (large side face)
d_2	75.8 mm	Shoulder diameter of inner ring (small side face)
D_1	89.2 mm	Shoulder diameter of outer ring (large side face)
$r_{1,2}$	min. 1.1 mm	Chamfer dimension
$r_{3,4}$	min. 0.6 mm	Chamfer dimension
a	28.3 mm	Distance from side face to pressure point

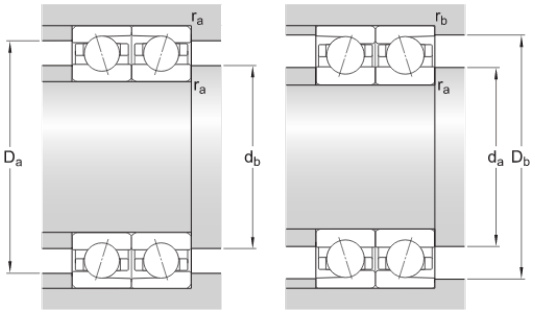

Abutment dimensions

d_a	min. 71 mm	Diameter of shaft abutment
d_b	min. 71 mm	Diameter of shaft abutment
D_a	max. 94 mm	Diameter of housing abutment
D_b	max. 96.8 mm	Diameter of housing abutment
r_a	max. 1 mm	Radius of fillet
r_b	max. 0.6 mm	Radius of fillet
d_n	78.1 mm	Position of oil nozzle

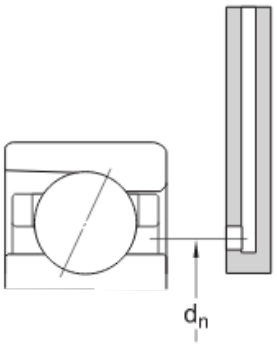

Calculation data

Basic dynamic load rating	C	39 kN
Basic static load rating	C_0	35.5 kN
Fatigue load limit	P_u	1.5 kN
Attainable speed for grease lubrication		12 000 r/min
Attainable speed for oil-air lubrication		19 000 r/min
Contact angle	α	25 °
Ball diameter	D_w	11.112 mm
Number of rows	i	1
Number of balls (per bearing)	z	20
Reference grease quantity (per bearing)	G_{ref}	5.7 cm^3

Preload and stiffness (back-to-back, face-to-face)

Preload, class A	G_A	240 N
Axial stiffnes for preload A (sets of two brgs back to back or face to face)		174 N/µm
Preload, class B	G_B	480 N
Axial stiffness for preload B (sets of two brgs back-to-back or face-to-face)		227 N/µm
Preload, class C	G_C	960 N
Axial stiffness for preload C (sets of two brgs back-to-back or face-to-face)		302 N/µm
Preload, class D	G_D	1 920 N
Axial stiffness for preload D (sets of two brgs back-to-back or face-to-face)		409 N/µm

Correction factors for preload calculation

Correction factor dependent on bearing series and size	f	1.13
Correction factor dependent on contact angle	f_1	0.99
Correction factor, preload class A	f_{2A}	1
Correction factor, preload class B	f_{2B}	1.02
Correction factor, preload class C	f_{2C}	1.05
Correction factor, preload class D	f_{2D}	1.08
Correction factor for hybrid bearings	f_{HC}	1

Factors for equivalent bearing load calculation

Limiting value	e	0.68
Axial load factor (single, tandem)	Y_2	0.87
Axial load factor (single, tandem)	Y_0	0.38
Radial load factor (single, tandem)	X_2	0.41
Axial load factor (back-to-back, face-to-face)	Y_1	0.92
Axial load factor (back-to-back, face-to-face)	Y_2	1.41
Axial load factor (back-to-back, face-to-face)	Y_0	0.76
Radial load factor (back-to-back, face-to-face)	X_2	0.67

Mass

Mass	0.43 kg

Terms and conditions

By accessing and using this website / app owned and published by AB SKF (publ.) (556007-3495 · Gothenburg) (“SKF”), you agree to the following terms and conditions:

Warranty Disclaimer and Limitation of Liability

Although every care has been taken to assure the accuracy of the information on this website / app, SKF provides this information "AS IS" and DISCLAIMS ALL WARRANTIES, EXPRESS OR IMPLIED, INCLUDING, BUT NOT LIMITED TO, IMPLIED WARRANTIES OF MERCHANTABILITY AND FITNESS FOR A PARTICULAR PURPOSE. You acknowledge that your use of this website / app is at your sole risk, that you assume full responsibility for all costs associated with use of this website / app, and that SKF shall not be liable for any direct, incidental, consequential, or indirect damages of any kind arising out of your access to, or use of the information or software made available on this website / app. Any warranties and representations in this website / app for SKF products or services that you purchase or use will be subject to the agreed upon terms and conditions in the contract for such product or service. Further, for non-SKF websites / apps that are referenced in our website / app or where a hyperlink appears, SKF makes no warranties concerning the accuracy or reliability of the information in these websites / apps and assumes no responsibility for material created or published by third parties contained therein. In addition, SKF does not warrant that this website / app or these other linked websites / apps are free from viruses or other harmful elements.

Third Party Services

When viewing YouTube content via the SKF website(s) (i.e. using YouTube API Services), you agree to be bound by the YouTube Terms of Service.

Copyright

Copyright in this website / app copyright of the information and software made available on this website / app rest with SKF or its licensors. All rights are reserved. All licensed material will reference the licensor that has granted SKF the right to use the material. The information and software made available on this website / app may not be reproduced, duplicated, copied, transferred, distributed, stored, modified, downloaded or otherwise exploited for any commercial use without the prior written approval of SKF. However, it may be reproduced, stored and downloaded for use by individuals without prior written approval of SKF. Under no circumstances may this information or software be supplied to third parties.
This website /app includes certain images used under license from Shutterstock, Inc.

Trademarks and Patents

All trademarks, brand names, and corporate logos displayed on the website / app are the property of SKF or its licensors, and may not be used in any way without prior written approval by SKF. All licensed trademarks published on this website / app reference the licensor that has granted SKF the right to use the trademark. Access to this website / app does not grant to the user any license under any patents owned by or licensed to SKF.

Changes

SKF reserves the right to make changes or additions to this website / app at any time.