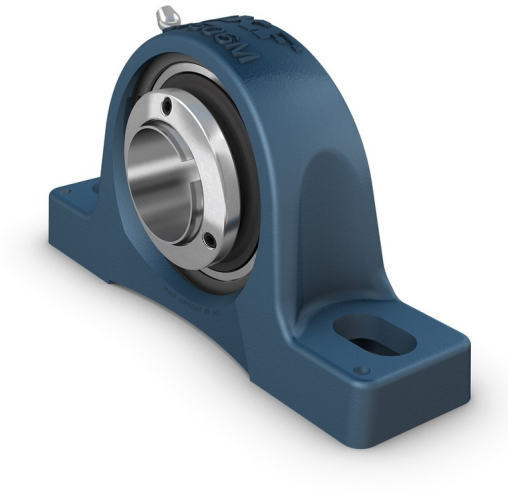

# SY 40 LFPillow block ball bearing unit with extended inner ring and SKF ConCentra locking, cast iron, ISO standards

## Pillow block ball bearing unit with extended inner ring and SKF ConCentra locking, cast iron, ISO standards

Pillow (plummer) block ball bearing units consist of an insert bearing mounted in a cast iron housing that can be bolted to a support surface. It has an inner ring extended on both sides and is locked onto the shaft by a SKF ConCentra locking, creating a true concentric tight fit, and setting the correct internal clearance within the bearing, and making it easy to mount.

- Strong
- Ready to mount
- Lubricated and sealed bearing
- Quick locking onto the shaft
- Cost-effective

## Overview

### Dimensions

| | |
|---|---|
| Shaft diameter | 40 mm |
| Centre height (pillow block) | 49.2 mm |
| Housing overall width | 48 mm |
| Centre distance between bolt holes | 135.5 mm |
| Bearing width, total | 43.1 mm |

### Performance

| | |
|---|---|
| Basic dynamic load rating | 30.7 kN |
| Basic static load rating | 19 kN |
| Limiting speed | 4 800 r/min |

### Properties

| | |
|---|---|
| Housing type | Pillow block |
| Number of bolt holes for fasteners | 2 |
| Fastening bolt hole type | Plain |
| Retaining feature, inner ring | SKF ConCentra |
| Bore type | Cylindrical |
| Rubber seating ring | Without |

| | |
|---|---|
| Material, housing | Cast iron |
| Material, bearing | Bearing steel |
| Coating | Without |
| Sealing, bearing | Seal and flinger on both sides |
| Sealing type | Contact, standard |
| Sealing, unit | Optional end cover |
| Lubricant | Grease |
| Relubrication hole | With |
| Grease fitting | With |

# Technical Specification

| | |
|---|---|
| Compliance with standard | ISO |
| Purpose specific | For material handling applications, For air handling applications |
| Material, housing | Cast iron |
| Sealing, bearing | Seal and flinger on both sides |
| Sealing type, bearing | Contact, standard |
| Sealing, unit | Optional end cover |
| Coating | Without |

NOT FOUND

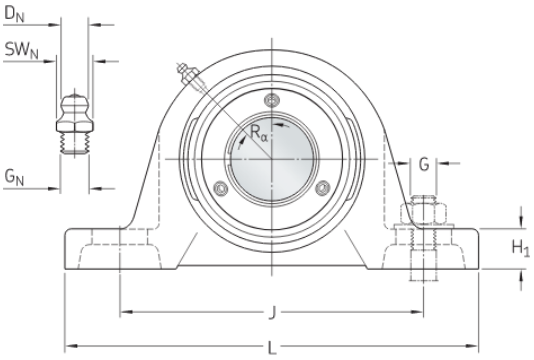


## Dimensions

| | | |
|---|---|---|
| d | 40 mm | Bore diameter |
| $d_1$ | ≈ 51.8 mm | Shoulder diameter of inner ring |
| $d_2$ | 62 mm | Outside diameter of locking ring |
| A | 48 mm | Base width |
| $A_1$ | 30 mm | Top width |
| $A_5$ | 26 mm | Standout of end cover |
| B | 33.9 mm | Width of inner ring |
| $B_1$ | 43.1 mm | Overall bearing width |
| H | 49.2 mm | Height of spherical seat centre |
| $H_1$ | 19 mm | Foot height |
| $H_2$ | 99 mm | Overall height |
| J | 135.5 mm | Distance between attachment bolts |
| J | max. 146 mm | Distance between attachment bolts |
| J | min. 125 mm | Distance between attachment bolts |
| L | 175 mm | Overall length |
| N | 14 mm | Diameter of attachment bolt hole |

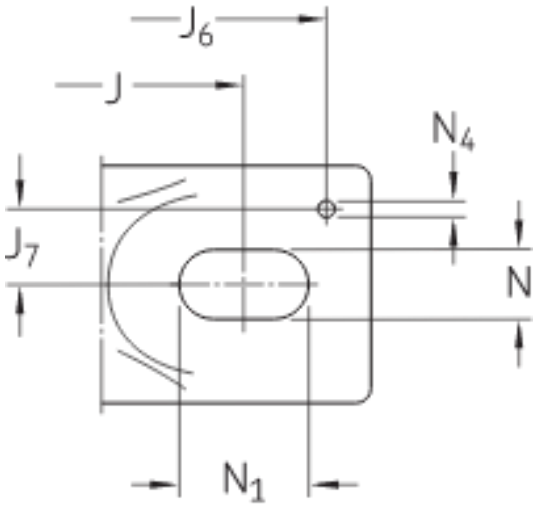


| | | |
|---|---|---|
| $N_1$ | 24.5 mm | Length of attachment bolt hole |
| $s_1$ | 26.2 mm | Distance from locking device side face to raceway centre |
| Values specified for $B_{11}$ | | |

Threaded hole

| | | |
|---|---|---|
| $R_G$ | 1/4-28 UNF | Housing thread for the grease fitting |
| $R_1$ | 3.5 mm | Axial position of the housing thread |
| $R_\alpha$ | 45 ° | Angular position of the housing thread |

Grease fitting

| | | |
|---|---|---|
| $D_N$ | 6.5 mm | Diameter of head sphere of grease fitting |
| SW | 7 mm | Hexagonal key size for the grease fitting |
| $G_N$ | 1/4-28 SAE-LT | Thread of grease fitting |

Dowel pins

| | | |
|---|---|---|
| $J_6$ | 161 mm | Distance of dowel pins |
| $J_7$ | 17 mm | Axial offset of dowel pins |
| $N_4$ | 4 mm | Recommended diameter for dowel pins |

## Calculation data

| | | |
|---|---|---|
| Basic dynamic load rating | C | 30.7 kN |
| Basic static load rating | $C_0$ | 19 kN |
| Fatigue load limit | $P_u$ | 0.8 kN |
| Limiting speed | | 4 800 r/min |

## Mass

| | | |
|---|---|---|
| Mass bearing unit | | 1.8 kg |

## Mounting information

| | | |
|---|---|---|
| Set screw | $G_2$ | M6 |
| Hexagonal key size for set screw | | 3.05 mm |
| Recommended tightening torque for set screw | | 7.4 N·m |
| Recommended diameter for attachment bolts, mm | G | 12 mm |
| Recommended diameter for attachment bolts, inch | G | 0.5 in |

# Terms and conditions

By accessing and using this website / app owned and published by AB SKF (publ.) (556007-3495 · Gothenburg) (“SKF”), you agree to the following terms and conditions:

## Warranty Disclaimer and Limitation of Liability

Although every care has been taken to assure the accuracy of the information on this website / app, SKF provides this information "AS IS" and DISCLAIMS ALL WARRANTIES, EXPRESS OR IMPLIED, INCLUDING, BUT NOT LIMITED TO, IMPLIED WARRANTIES OF MERCHANTABILITY AND FITNESS FOR A PARTICULAR PURPOSE. You acknowledge that your use of this website / app is at your sole risk, that you assume full responsibility for all costs associated with use of this website / app, and that SKF shall not be liable for any direct, incidental, consequential, or indirect damages of any kind arising out of your access to, or use of the information or software made available on this website / app. Any warranties and representations in this website / app for SKF products or services that you purchase or use will be subject to the agreed upon terms and conditions in the contract for such product or service. Further, for non-SKF websites / apps that are referenced in our website / app or where a hyperlink appears, SKF makes no warranties concerning the accuracy or reliability of the information in these websites / apps and assumes no responsibility for material created or published by third parties contained therein. In addition, SKF does not warrant that this website / app or these other linked websites / apps are free from viruses or other harmful elements.

## Third Party Services

When viewing YouTube content via the SKF website(s) (i.e. using YouTube API Services), you agree to be bound by the YouTube Terms of Service.

## Copyright

Copyright in this website / app copyright of the information and software made available on this website / app rest with SKF or its licensors. All rights are reserved. All licensed material will reference the licensor that has granted SKF the right to use the material. The information and software made available on this website / app may not be reproduced, duplicated, copied, transferred, distributed, stored, modified, downloaded or otherwise exploited for any commercial use without the prior written approval of SKF. However, it may be reproduced, stored and downloaded for use by individuals without prior written approval of SKF. Under no circumstances may this information or software be supplied to third parties.
This website /app includes certain images used under license from Shutterstock, Inc.

## Trademarks and Patents

All trademarks, brand names, and corporate logos displayed on the website / app are the property of SKF or its licensors, and may not be used in any way without prior written approval by SKF. All licensed trademarks published on this website / app reference the licensor that has granted SKF the right to use the trademark. Access to this website / app does not grant to the user any license under any patents owned by or licensed to SKF.

## Changes

SKF reserves the right to make changes or additions to this website / app at any time.